ATENEO DE MANILA UNIVERSITY

GRADUATE SCHOOL OF BUSINESS

PROGRAM CATALOGUE

2022 EDITION

MBA in Health Program

PROGRAM CATALOGUE

ATENEO GRADUATE SCHOOL OF BUSINESS

MBA IN HEALTH PROGRAM

2022 EDITION

Copyright ©2022 Graduate School of Business, Ateneo de Manila University

The MBA in Health Program Catalogue is published by
Office of the Registrar
Ateneo de Manila University
Graduate School of Business

Telephone:	8899-7691, local 2214 to 2217
Direct Line/Telefax:	8899-5548
Address:	20 Rockwell Drive, Rockwell Center, Makati City
E-mail:	registrar.gsb@ateneo.edu
Website:	www.gsb.ateneo.edu

Contents

PART 1: General Information

I. A Brief History 1

Ateneo De Manila University 1

Ateneo Graduate School Of Business 2

II. Vision and Mission 4

The Ateneo de Manila University 4

Ateneo Graduate School of Business 5

III. Our Students and Graduates 6

IV. Our Competence 7

Faculty. 7

Programs and Course Offerings. 7

Teaching Methods and Resources. 7

Workplace-based & Experience-driven Pedagogy. 7

Technology-driven. 7

PART 2: The MBA in Health Program

I. Distinctive Features 8

II. The MBA In Health Program Curriculum 10

General Description 10

1. Major Courses 11

2. Core Courses 11

3. Electives 11

4. Integrating Course 11

MBA Health Program Course Sequence 12

Course Descriptions 13

PART 3: Admission Requirements

I. Requirements 19

I. A BRIEF HISTORY

Ateneo De Manila University

The Ateneo de Manila University traces its roots back to 1859 when, at the request of the City of Manila endorsed by Governor Norzagaray, the Jesuits took over the Escuela Municipal in Intramuros, the walled city of Manila. A primary school originally intended for the sons of Spaniards, it was opened by the Jesuits to native Filipinos as well. In 1865, the Jesuits received government approval to add a five-year program leading to the degree of Bachelor of Arts. In keeping with its new academic status, the school was renamed the Ateneo Municipal de Manila. Among the graduates in those early decades was Jose Protacio Rizal, A.B. 1877, who would later be named the Philippines' national hero.

With the withdrawal of city subsidies in 1901, the Ateneo became a private institution, dropping the word "Municipal" from its official name. In 1921, the American Jesuits of the Maryland-New York Province replaced the Spanish Jesuits as teachers and administrators of the Ateneo.

The Intramuros fire of 1932 completely destroyed the Ateneo buildings, forcing the school to move to a new location on Padre Faura Street, Ermita. During the battle for the liberation of Manila, the Padre Faura complex of buildings was razed. Temporary structures were quickly built, but in 1952, the Ateneo moved to its present spacious campus in Loyola Heights, Quezon City.

In 1958, the Society of Jesus in the Philippines was raised to the status of a full province. Administration of the Ateneo passed from New York to the Philippine Province of the Society of Jesus, and shortly after, the first Filipino Rector/President of the Ateneo was named. Since the growth of the Ateneo demanded a new status, the school obtained its charter as a university in 1959.

Today the Ateneo de Manila is a 155-year-old institution comprised of basic, higher, and professional education units. The units of higher education—the School of Humanities, the John Gokongwei School of Management, the School of Science and Engineering, and the School of Social Sciences—are collectively known as the Loyola Schools. The Graduate School of Business, the Law School, the School of Government, and the School of Medicine and Public Health comprise the Professional Schools. Like most Philippine universities, the Ateneo has a grade school and high school noted for high educational standards.

The Loyola Schools, basic education units, and the School of Government are located in the Loyola Heights campus in Quezon City. The Graduate School of Business and Law School are based in the Rockwell Center campus in Makati City. Finally, the School of Medicine and Public Health is based in Pasig City.

The Ateneo's identity is as a Filipino, Catholic, and Jesuit university known for producing professionals- for-others who excel in their fields and aim to serve the community through their work. It has recently identified four strategic thrusts for the coming years: mission and identity, nation-building, sustainable development, and internationalization. The Ateneo, as an academic community, seeks to fulfill its mission through the exercise of the functions proper to a university, namely, teaching, research, and service to the community.

Ateneo Graduate School of Business

The Graduate School of the Ateneo de Manila was first established in 1948, with Master of Arts programs in Education and English as its initial offerings. Over time, other fields of study were introduced, among them Sociology, Economics, Philosophy, and Business Administration.

As its offerings grew in size and complexity, the Graduate School eventually found it necessary to split into two separate entities, and in 1960 the Graduate School of Arts and Sciences, and the Graduate School of Economics and Business Administration were born.

The Graduate School of Economics and Business Administration initially offered only two part-time evening programs: a Master of Arts in Economics, and a Master in Business Administration. A full-time MBA was added to its program portfolio in 1964. Two years later, the Master of Arts in Economics was transferred to the Graduate School of Arts and Sciences, and the school was reorganized into the present-day Ateneo Graduate School of Business, or AGSB.

In 1968, the Ateneo de Manila University, De La Salle College, the Ford Foundation, and Harvard University collaborated to set up the Asian Institute of Management (AIM), with the agreement that AIM was to concentrate on offering full-time MBA programs, while Ateneo and La Salle would focus exclusively on part-time programs. As a result of this collaboration, AGSB seconded many of its faculty to the AIM, and discontinued its full-time MBA program. Now

focused exclusively on working students, and wishing to move closer to its target clientele, AGSB moved to a new campus on H.V. de la Costa St., Salcedo Village, Makati, in 1977.

The 1990s were a period of rapid growth and revitalization for AGSB under the leadership of its new Dean, former Secretary of Health, Dr. Alfredo R.A. Bengzon, who took its helm in 1993. The period was characterized by the introduction of many innovative new degree as well as non-degree programs, and a boom in student enrollment.

Under his leadership, the AGSB continued its special focus on health care management and public health. The Master in Hospital Administration, launched in 1978, was reinvented as the Master in Health Service Administration in 1998, and eventually, in 2002, renamed the MBA in Health. Many new non-degree programs were launched, including the award-winning Leaders for Health program.

In 1998, the Ateneo Professional Schools, made up of AGSB and the Ateneo Law School, moved to its new state-of-the-art campus at the Rockwell Center, in Makati City. The Ateneo-Regis MBA program was launched that same year, in partnership with Regis University (Denver, Colorado), a pioneer and leader in adult and workplace-based learning.

In 2003, the Commission on Higher Education granted AGSB full autonomy status, in recognition of its pace-setting innovations in management training and leadership development, and its continuous commitment to quality education. In 2004, CHED rated AGSB as the number one business school in the country out of the 199 schools it evaluated that year. In August, 2010, the school received full accreditation from the Philippine Accrediting Association of Schools, College and Universities, or PAASCU.

To make its brand of business education more accessible to a wider public, the AGSB operates satellite campuses all over the country, including in Santa Rosa, Laguna; Clark Field, Pampanga; Cebu City, and Iloilo City.

Staying true to the Jesuit tradition of magis and excellence in service to others, and constantly spurred by its passionate desire to provide its students with the best quality education in the service of the nation, the AGSB today remains ever more committed to its value proposition that business is not only for profit but also for nation building, and that “our country is our business”.

II. Vision and Mission

THE ATENEO DE MANILA UNIVERSITY

Vision

In the spirit of being Lux in Domino, Light in the Lord, Ateneo de Manila University will be a force for good in seeking innovative and sustainable solutions to society's most pressing challenges. Rooted in its Filipino, Catholic, and Jesuit values, Ateneo will be a collaborative and engaged leader in the work of social transformation through education, formation, research, and social engagement.

Mission

As a University, Ateneo de Manila seeks to uphold, preserve, and communicate truth and apply it to human development and the preservation of the Earth.

As a Filipino University, Ateneo de Manila seeks to identify, enrich, and embody Philippine culture and contribute to the development of the nation and the upliftment of Filipinos as part of the global community.

As a Catholic University, Ateneo de Manila seeks to form persons-for-and-with-others who, following the teachings and example of Christ, will devote their lives to promotion of service and justice, especially for those who are most in need of help, the poor, and the powerless.

As a Jesuit University, Ateneo de Manila seeks the goals of Jesuit liberal education through the harmonious development of moral and intellectual virtues. Imbued with the Ignatian spirit, the University aims to lead its students to see God in all things and to strive for the greater glory of God and the greater service of mankind.

Ateneo de Manila University seeks all these through excellence in teaching, learning, and formation; creation and advancement of knowledge through cutting-edge research and creative work; cultivation of an inclusive, diverse, and sustainable institution and community; and an expansive and immersive engagement with society.

AGSB Vision, Mission and Values

Our Vision

To be a leading management learning institution that develops responsible business leaders with the integrity and conviction to advance a sustainable society founded on human dignity

Our Mission

As a Jesuit learning institution, we are committed to:

- Fostering a community of leaders for others grounded on the principles of Cura Personalis and Magis, and passionate in their belief in the interdependence of integrity, service, and expertise
- Developing relevant program offerings that equip our learners with the competences for leading and managing in the digital era, and mastery of self to succeed in their chosen endeavor
- Enhancing the personal and professional growth of our faculty and staff as they are crucial partners in the fulfillment of our mission

Our Core Values

The pursuit of our Vision and Mission is grounded on:

- Love of country and responsible citizenship
- Care for the planet, care of the environment
- Expertise, service, and integrity
- Inclusiveness and respect for each other's differences
- A safe, nurturing, and caring environment for our learners, alumni, faculty, and staff

III. Our Students and Graduates

Our students are workplace-based, practitioner adult learners who are well on their way to managerial careers and wish to take advanced studies to equip them with the concepts, theoretical models, skills, principles, and values needed by today's managers and leaders. We seek to produce professionals, who can manage and lead in a changing environment, with fundamental skills steeped in unwavering principles and values. We strive to produce graduates who can:

- Critically analyze information, situations, systems and issues.
- Make strategic and innovative decisions in an unpredictable environment and in a global context.
- Integrate concepts from various disciplines and arrive at a synthesis and/or new knowledge by applying these to business situations and other realities.
- Integrate the use of information and cost-efficient technologies.
- Manage stakeholder relationships and issues.
- Demonstrate high proficiency in written and oral communication in a business context.
- Utilize effective teams in performing tasks and managing activities.
- Demonstrate effective personal and organizational leadership skills.
- Make business decisions according to solid, appropriate and defensible moral principles and address business ethical questions and dilemmas with reason and integrity.
- Promote social responsibility and work towards making a contribution to nation-building.

Thus, a graduate of the Ateneo Graduate School of Business is a product of an Ateneo education – technically competent, and socially committed.

IV. OUR COMPETENCE

Faculty. Our faculty members are workplace-based and experience-driven management practitioners occupying senior executive positions in their respective organizations or entrepreneurs managing their own businesses.

Programs and Course Offerings. The AGSB addresses the need for the management and business education of individuals and institutional clients, from both the private and public sectors. The AGSB assesses and defines the training needs and designs the most appropriate programs and course offerings to meet these needs. The customizing of courses provides the strength and relevance of the programs and offerings of the AGSB.

Teaching Methods and Resources. The teaching methods employed in the courses, seminars, and workshops are imbued with the following elements.

- Bias for research and critical thinking
- Human resource focus and orientation
- Information technology-driven

AGSB invests in teaching and learning resources, such as computers and internet services, state-of-the-art audiovisual equipment, up-to-date teaching materials, both local and foreign case materials, and particularly cases prepared and submitted by our faculty.

The AGSB uses the adult learner methodology of facilitative learning wherein both students and faculty are simultaneously teachers and students who leverage their practical experiences in an interactive manner. Through this methodology, the theories and concepts learned are immediately applied, validated, improved, and enhanced in a real business setting, and complementarily, practical insights and knowledge of practitioners are brought into the classroom for enhanced learning.

Workplace-based & Experience-driven Pedagogy. Theory and practice come together naturally at the AGSB. Theories and principles are enlivened by being situated in the concrete management experiences of the teachers. At the same time, the work experience of the students are better understood and made more meaningful when contextualized within management theories and principles.

Technology-driven. Today's society is an information-driven society. The AGSB emphasizes information as an asset and the technology that is made available to access, process, and utilize this information.

I. DISTINCTIVE FEATURES

The quest for an effective health care delivery system that is responsive to the needs of our people in terms of availability, accessibility, and affordability of services is a continuing concern. The increasing demands of our rapidly expanding population, the growing complexities of health care services, and the challenges of globalization have given rise to the critical need for a new brand of leadership in health care institutions, both in the private and the public health sector. This new leader/manager should be equipped with the appropriate managerial skills in order to be able to properly direct the utilization of resources to achieve economically productive and socially oriented objectives of the organization.

Health executives, aware of the need to improve their knowledge and skills, but who cannot afford full-time study leave from their work, clamor for a management development program that can contribute to higher quality performance while at their jobs.

The Master in Business Administration in Health is the response of the Health Unit of the Ateneo Graduate School of Business to this prevailing need.

The Program provides formal management education to administrators of health service organizations who may not have had the benefit of such training in the past, and health care managers who would like to pursue careers leading to the positions of Chief Executive Officer (CEO) or Chief Operating Officer (COO) of organizations operating within the health care system. This degree program offers a new model for training health managers by providing the breadth of understanding needed to lead this industry into the future. Its student profile encompasses a broad spectrum of health care personnel, including nurses, physicians and allied health professionals, and its interactive design enables students to learn from each other as well as from the faculty made up of distinguished medical and business practitioners.

After the Program, the graduate is expected to have:

- Adequate preparation for greater administrative and managerial responsibilities beyond the career role of clinician or practitioner in health service institutions
- In-depth knowledge and understanding of the nature and application of the management process in health care settings
- Capacity for reflection and translation of thought into action as leaders in the advocacy of an appropriate health care delivery system
- Capacity for informed decision-making as manifested in improved functional competence in the use of quantitative and qualitative tools and techniques in problem-solving and decision-making in health care organizations
- Enhanced sensitivity to people and group processes, recognizing them as the organization's vital resources in the achievement of its patient care and client's objectives
- The ability to connect to the various key players in the sector towards a common vision
- A balanced integration of their individual value system, management philosophy, and leadership styles in the performance of their responsibilities as the organization's chief executive or as middle managers
- A renewed commitment to professionalism and observance of ethical practices in the management of health care organizations, and
- A better appreciation of the role of the health services organization as a component of the health system in the country's socio-economic development.

II. THE MBA IN HEALTH PROGRAM CURRICULUM

GENERAL DESCRIPTION

a. The MBA in Health is offered on a trimestral basis. Class work is one (1) day a week (Saturdays) with two courses of three hours each per session for fourteen (14) sessions per trimester.

b. The program is completed in seven (7) consecutive trimesters or a total of twenty eight (28) months. Students with a fixed load of six (6) units per trimester are able to complete the academic requirements within this period. Students who develop their strategic management paper early during their course work can graduate by the last (7th) trimester.

c. The maximum load per trimester is two (2) courses. Additional load requires approval from the director of MBAH.

d. The MBA in Health Program consists of the following courses:

Major Course	12 units
Core Courses in Management	21 units
Electives	6 units
(~~Integrating Course~~) Capstone	3 units
Total	**42 units**

e. The required health care core courses serve as foundation and context by which the student is challenged to understand and apply the structure and operation of health care systems. The major MBA courses give the student a solid mastery of management fundamentals.

f. Attendance in all courses is required. Absence from class for a total of 20% of sessions per course may be considered as excused absences.

g. Instructional methodology is of graduate level quality. To provide the students with the foundation for professional practice of general management in the health care enterprise, a combination of lectures, workshops, home-reading assignments, case studies, field work, self-learning modules and directed research are used that:

- Provide factual and practical knowledge of the health care field
- Strengthen the student's faculties of analysis, problem-solving, and decision-making
- Challenge the student's initiative and self-discipline
- Encourage independent thought, intensity of purpose, freedom from bias, thoroughness of inquiry, originality and creativity
- Promote group interaction and cooperation, and
- Foster a high sense of professional responsibility.

COURSE	CODE	UNITS
1. Major Courses		
Principles and Concepts in Health and Development	MHPCHDEV	3
Managerial Epidemiology	MBEPIDEM	3
Health, Culture, and Society	MHCULSOC	3
Health Economics for Managers	MBHEAECO	3
2. Core Courses		
Ethics in Health Care	MBETHICS	3
Dynamics of Leadership	MHDYLEAD	3
Principles and Dynamics of Management	MHPRIMAN	3
Marketing Management	MBMARKMA	3
Financial Management	MHFINMAN	3
Operations Management	MHOPEMAN	3
Human Resource Management	MHHUMRES	3
3. Electives (choose 2)		
Health Informatics	MBHINFO	3
Entrepreneurship	MBENTREP	3

4. Integrating Course

Strategic Management	MBSTRAMA	3

MBA HEALTH PROGRAM COURSE SEQUENCE

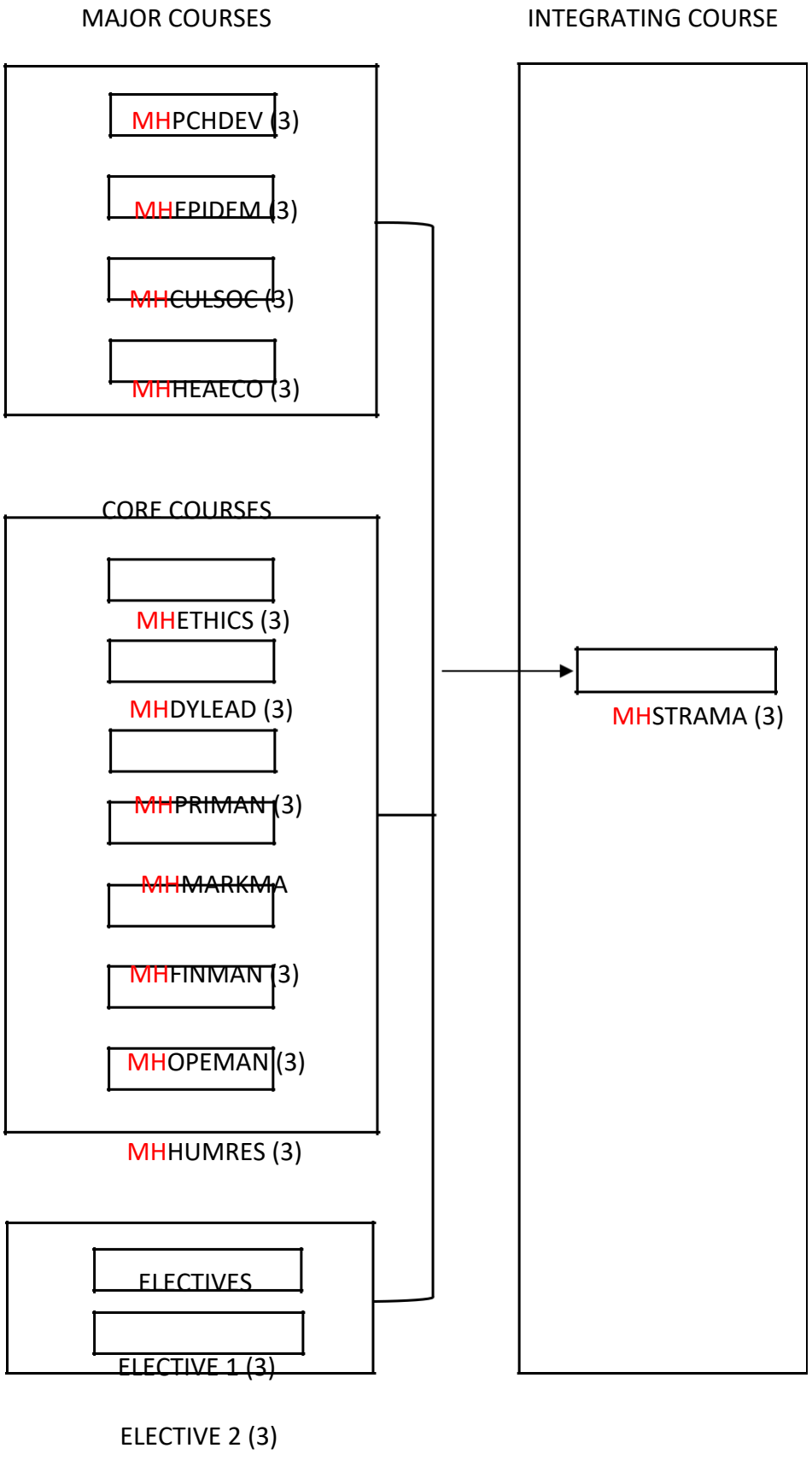

COURSE DESCRIPTIONS

1. Major Courses

Principles and Concepts in Health and Development (MHPCHDEV)

This is a core course in the MBA-Health program that grounds the students on the Philippine health system. Students are introduced to the concepts of health and development and to the workings of the health system. Elements of the health system are analyzed and stakeholders identified. Students are asked to look at how these elements and stakeholders interact, either in synergy or in opposition to each other, as the health system moves towards improving the health of the people.

The course stresses the need for a more rational, coherent and enlightened understanding of the workings of the health system so that the fragmentation and disconnectedness that pervade the current system can be reformed by influencing the way people think, feel and behave about health.

Students are also asked to confront the roles they play, as health professionals representing various sectors and disciplines, in this process of transformation. The end goal of the course is to provide the students with a relevant context for the application of the competencies they will learn as leaders and managers in the health sector.

.

Managerial Epidemiology (MBEPIDEM)

This course is an introduction to the use of epidemiology in management and decision-making for the graduate student. The student will learn to use an epidemiological model for the delivery of health care services, methods for measuring need and health, analytic approaches to decision-making when evaluating the impacts of health care programs and policies, and how to apply epidemiology in program planning and selected specialty areas.

Health, Culture and Society (MHCULSOC)

The course will introduce perspectives from the social sciences and their possible applications for health care, particularly the development of cultural competence. Using a cross-cultural survey of different medical systems- with emphases on those found in the Philippines-the course will underscore the need to look at the diversity of meanings,

beliefs, symbols and rituals around health care, both "western" and "non-western". The course will also look at the ways different societies organize themselves for health care in the popular, folk and professional sectors, often in response to challenges posed by the environment. Finally, the course will look at how macro structures and institutions-locally and globally-shape health care systems in different social and historical settings.

Health Economics for Managers (MBHEAECO)

The course is an introduction to health economics or the use of economics in the health sector. There are two branches of health economics: micro and macro. The former focuses on economic behavior of individuals and firms while the latter focuses on system structure and complex interactions between the structural components that affect national health system outcomes. Both branches are important in understanding health care policies and management decisions and the course will cover both.

Economic theory and analysis influence health decision-making and the course will provide the students with an economic framework to understand how the Philippine health system is structured. The course will also deal with the issue of allocation of limited health care resources. Further, the conduct of economic evaluation of healthcare interventions will be deliberated in class.

2. Core Courses

Ethics in Health Care (MBETHICS)

Many business schools in the world today require Business Ethics courses in order "to educate men and women on a heightened sense of their moral and social responsibilities." (Can Ethics be Taught: Approaches at Harvard Business School 1993) There is a growing recognition that managers have a tremendous power to shape not only business organizations but the surrounding community as well. In light of recent business scandals in the United States, the public is increasingly demanding that managers use this power with care and that business be accountable to society at large.

Managers in the health care business are not exempt. In fact, there is an even greater call for ethical behavior in this field because it generally deals with vulnerable populations.

Health care ethics has traditionally been taught within the confines of the patient-doctor relationship. In truth, health care ethics necessarily concerns the larger community where conflicts of interests are often the norm rather than the exception. Thus, there is

a need for health care providers—managers and practitioners alike—to be capable of ethical deliberation and action.

The course will discuss the foundations of ethics in general and of health care ethics in particular. It will also attempt to help students improve their ethical decision making by presenting a model for ethical reasoning that may be used in analyzing dilemmas confronting health care managers.

Dynamics of Leadership (MHDYLEAD)

This course aims to introduce the students to a depth of thinking about individuals and collective patterns of leadership practices called for in this Master's program. Designed as an interactive and reflective course, the learning interventions will focus on guiding the students to reflectively process or understand leadership patterns and dynamics as applied in their personal and professional lives. Reflective/critical thinking and ethics based reasoning and decision-making are emphasized.

Principles and Dynamics of Management (MHPRIMAN)

The course provides learners with an understanding of the role of management and the analytical tools to competently cope with the challenges facing today's management. Business enterprises and non-profit organizations operate within a complex and rapidly changing global environment. The field of management is undergoing a revolution. Globalization, economic deregulation, trade liberalization, technological advancement and the widening of the urban poor have created new threats and opportunities confronting managers. This course is designed to familiarize learners with the accepted management standards, procedures and techniques employed by corporate, business and functional level managers.

Marketing Management (MBMARKMA)

The course is designed to provide learners with a formal training on the fundamental concepts and practices of Marketing in the context of the new economy. It will also focus on the formulation and implementation of marketing strategies in the areas of research, products and services, pricing, distribution, advertising and promotion, market analysis, alternative approaches to competition, brand building, and revenue-generating activities. These strategies, to serve their purpose, are best aligned to the business environment,

hyper competition, digitalized technologies, the empowered consumer, and the country's widening base of the poor. This course will likewise help learners gain a good understanding of administrative processes where marketing plays a central role in the game of demand creation and customer satisfaction. Finally, everyone will get to appreciate, by the latter part of the 15 sessions, that Marketing is indeed a powerful contributor to nation building.

Financial Management (MHFINMAN)

This course deals with decision making under uncertainty for corporate financial management designed particularly for health care institutions. Critical evaluation of concepts is emphasized to assess their usefulness in practical business situations. Problem-solving methodology is used to illustrate the theories and tools in financial decision making including the use of health demographics to help with the financial evaluation studies.

More importantly, this course tackles the ethical issues and dilemmas faced by the financial manager in his day-to-day work as chief financial officer for a healthcare institution with a very important primary mission of service to its patients. The students will be taught how to resolve these ethical dilemmas.

Operations Management (MHOPEMAN)

The course covers in-depth discussion/study of specific Operations Management (OM) philosophies, concepts, trends, tools and techniques to highlight the importance of OM in a manufacturing or service organization's pursuit of strategic goals and objectives. It focuses on strategic and tactical issues covering quality management, process management, and supply chain management.

While providing students with technical and quantitative tools, it will focus more on the managerial aspect of operations, as well as on the ethical and social implications of OM decisions.

Human Resource Management (MBHUMRES)

Management is generally about making other people produce the results that one desires. An organization's human resources is therefore of paramount value, being responsible for producing the outputs and outcomes that the organization is

designed to do. The course emphasizes the need for the alignment of human resource management policies, practices, and programs with the goals, strategies, and values of the organization. It presents tools for enabling the learner to understand the most vital resource of the organization-its people.

It provides a fresh perspective on the role of Human Resource Management and the function of the Human Resource Management Officer as an agent of change, in partnership with top management. The course describes how, together, they can build one of the most critical sources of sustainable competitive advantage-an organization whose design, culture, and people are aligned with strategy and values.

It addresses the need for functional, if not high performing human resource management systems, such as recruitment and selection, induction, compensation and benefits, performance management, rewards and incentives, learning and development, retention, and work-force relationships from a strategic perspective. A discussion on the need to build a culture that will encourage high levels of productivity is also included.

3. Electives

Health Informatics (MBHINFO)

The course will provide students concepts and tools in managing technology in health. The management of information has become a key competitive advantage among healthcare enterprises. New technologies such as the Internet and mobile have given rise to new channels of delivery.

In comparison to other health informatics courses, this course was developed particularly with a management perspective. This course will provide an overview of health informatics, public health informatics. Key concepts in hospital information systems such as electronic health records and clinical decision support will also discussed.

Entrepreneurship (MBENTREP)

Entrepreneurship has traditionally been understood as simply starting up a new business outside of the corporate setting. The course addresses the problem that a start-up entrepreneur faces – having a business just like a hundred other businesses that are competing for a shrinking market. At the same time, the heads of big businesses, awash with cash and basking in past success think nothing can go wrong with a new venture, become lax, only to find their sales and cash flow diminishing

The course focuses not only on new businesses, but also on existing businesses that are faced with a changing or changed environment where industries change, customer needs and demands change, and the tide of the economy can also turn against the business. The entrepreneur must know how to rejuvenate products, processes, markets, and the way one does business.

4. Integrating Course

Strategic Management (MBSTRAMA)

The course serves as the capstone course for the MBA program. It aims to enable the learners develop and implement strategic cross-functional decisions towards the attainment of their organizations' vision, mission and objectives using strategic management principles and integrating knowledge and skills acquired by the learners from the other MBA courses.

The learners will apply the strategic management process consisting of strategy formulation, strategy implementation and strategy evaluation, as well as the various analytical frameworks and strategy formulation tools that can aid them in strategic decision making. Through this course, the learners' strategic thinking capability is expected to be strengthened as they are made to critically analyze and integrate information about their companies' external and internal environment in the local and global context, and to use this in formulating and implementing innovative strategies that can help their companies build a sustainable competitive advantage. The learners will likewise be made to understand the different strategy choices and to evaluate strategic management issues and concepts that are important to managing in today's global environment. This course also aims to promote among its learners ethical business decisions, the practice of corporate social responsibility and making a contribution towards nation building.

I. Requirements

To qualify for the MBA in Health Program, an applicant must have:

1. A bachelor's degree, preferably in Health from a recognized college or university. Non-Health graduates may also be admitted subject to the decision of the Admission Committee.
2. A copy of the applicant's CV. The applicant must have accrued meaningful employment and work experience of at least five (5) years in a managerial or upper supervisory position
3. A COPY of the official transcript of records (TOR) from the last school attended. Applicants who are in a post-bachelors' program but have not graduated yet are required to submit a copy of their bachelors' degree TOR.
4. Fully accomplished online application
5. Interview by the Admission Committee
6. Accomplished recommendation form from the current employer.

In addition to the above-mentioned requirements, a foreign applicants must submit:

1. Transcript of records or documents showing academic accomplishments from the country of origin, translated into English and authenticated by the Philippine Embassy or Philippine Consular Office in the country of origin.
2. If the applicant is from a non-English speaking country, working English proficiency, both oral and written evidenced by IELTS Band 7 or higher.
3. Copy of passport
4. An approved visa valid for study in the Philippines. As a rule, foreigners in the Philippines under a 9(a) visa cannot study in the Philippines. That visa must be converted to more commonly a student visa (9(f). Other visas valid for study include:
   9(f) – Student
   9(g) – Working, Missionary
   13(a-g) - Immigrant
   47(a)(2) – Special Non-Immigrant
   Diplomatic Visa – extend to dependents
   SRRV – Retirees
   SIRV – Investors
5. Alien Certificate of Registration (ACR-I Card) issued by the Bureau of Immigration.

6. Certificate of Employment – For those under a 9(g) visa.